evotherm®

HIGH PERFORMANCE HEAT PUMPS

EVOTHERM

ETI-V INVERTER HEAT PUMPS

Installation and Operation Manual for

EVOTHERM ETI-V INVERTER HEAT PUMP

ETI-V 35 | ETI-V 45

⚠ WARNING

This equipment must be installed and serviced by a qualified technician. Improper installation can create electrical hazards which could result in property damage, serious injury or death. Improper installation will void the warranty.

NOTICE TO INSTALLER

This manual contains important information about the installation, operation and safe use of this product. Once the product has been installed this manual must be given to the owner/operator of this equipment.

evolution®

WATER & LIGHTING SOLUTIONS

R32

NEW REFRIGERANT GAS

INDEX

1. FOREWORD 1
    1.1 Read the Manual Before Operation 1
    1.2 The Symbol Description of the Device 6
    1.3 Statement 6
    1.4 Safety Factors 6
2. OVER VIEW OF THE UNIT 9
    2.1 Accessories Supplied With the Unit 9
    2.2 Dimensions of the Unit 10
    2.3 Main Parts of the Unit 11
    2.4 Parameter of the Unit 13
3. INSTALLATION AND CONNECTION 14
    3.1 Transportation 14
    3.2 Notice Before Installation 14
    3.3 Installation Instruction 15
        3.3.1 Pre-requirements 15
        3.3.2 Heat Pump Installation 15
        3.3.3 Location and Space 16
        3.3.4 Installation Layout 17
        3.3.5 Electrical Installation 19
        3.3.6 Electrical Connection 20
        3.3.7 Third Party Controllers & Pool Pump connections 20
    3.4 Trial After Installation 23
        3.4.1 Inspection Before Trial Running 23
        3.4.2 Trial Running 23
4. REMOTE CONTROLLER OPERATION GUIDANCE 23
    4.1 Control Panel Diagram 23
    4.2 Key Operating Instruction 25
        4.2.1 Target temperature setting 25
        4.2.2 ON/OFF Function 25
        4.2.3 Mode Selection Function 25
        4.2.4 Frequency settings 27
        4.2.5 Lock screen function 27
        4.2.6 Current faults 27
        4.2.7 Status Inquiry 28
        4.2.8 Setting interface 29
        4.2.9 Display Interface 29
        4.2.10 System Parameters 31
        4.2.11 General parameters 32
        4.2.12 Time settings 32
        4.2.13 Curve 33
        4.2.14 Power consumption query 33

4.3 System Parameters 34
4.4 Fault & Protection 37
5. Wi-Fi Settings 39
5.1 Download and Register 39
5.2 Add device and share device 40
5.3 Software function operation 43
5.4 Modify Device Name/Delete Device 45
5.5 Timing 46
5.6 Set Parameters 47
5.7 Mine 50
6.MAINTENANCE AND WINTERZING 51
6.1 Maintenance 51
6.2 Winterizing 51
7.Warranty Information 52

1. FOREWORD

1.1 Read the Manual Before Operation

WARNING

Do not use means to accelerate the defrosting process or to clean, other than those recommended by the manufacturer. The appliance shall be stored in a room without continuously operating ignition sources (For example: open flames, an operating gas appliance or an operating electric heater.)

Do not pierce or burn.

Be aware that refrigerants may not contain an odour.

Initial safety checks shall include:

① that capacitors are discharged: this shall be done in a safe manner to avoid possibility of sparking;

② that no live electrical components and wiring are exposed while charging, recovering or purging the system;

③ that there is continuity of earth bonding.

Checks to the area

Prior to beginning work on systems containing flammable refrigerants, safety checks are necessary to ensure that the risk of ignition is minimized. For repair to the refrigerating system, the following precautions shall be completed prior to conducting work on the system.

Work procedure

Work shall be undertaken under a controlled procedure so as to minimize the risk of a flammable gas or vapour being present while the work is being performed.

General work area

All maintenance staff and others working in the local area shall be instructed on the nature of work being carried out. Work in confined spaces shall be avoided.

Checking for presence of refrigerant

The area shall be checked with an appropriate refrigerant detector prior to and during work, to ensure the technician is aware of potentially flammable atmospheres. Ensure that the leak detection equipment being used is suitable for use with flammable refrigerants, i.e. non-sparking, adequately sealed or intrinsically safe.

Presence of fire extinguisher

If any hot work is to be conducted on the refrigerating equipment or any associated parts, appropriate fire extinguishing equipment shall be available to hand. Have a dry powder or CO2 fire extinguisher adjacent to the charging area.

No ignition sources
No person carrying out work in relation to a refrigeration system which involves exposing any pipe work that contains or has contained flammable refrigerant shall use any sources of ignition in such a manner that it may lead to the risk of fire or explosion. All possible ignition sources, including cigarette smoking, should be kept sufficiently far away from the site of installation, repairing, removing and disposal, during which flammable refrigerant can possibly be released to the surrounding space. Prior to work taking place, the area around the equipment is to be surveyed to make sure that there are no flammable hazards or ignition risks. “No Smoking” signs shall be displayed.

Ventilated area
Ensure that the area is in the open or that it is adequately ventilated before breaking into the system or conducting any hot work. A degree of ventilation shall continue during the period that the work is carried out. The ventilation should safely disperse any released refrigerant and preferably expel it externally into the atmosphere.

Checks to the refrigeration equipment
Where electrical components are being changed, they shall be fit for the purpose and to the correct specification. At all times the manufacturer’s maintenance and service guidelines shall be followed. If in doubt consult the manufacturer’s technical department for assistance.
The following checks shall be applied to installations using flammable refrigerants:
① the charge size is in accordance with the room size within which the refrigerant containing parts are installed;
② the ventilation machinery and outlets are operating adequately and are not obstructed;
③ if an indirect refrigerating circuit is being used, the secondary circuit shall be checked for the presence of refrigerant;
④ markings for the equipment continues to be visible and legible. Markings and signs that are illegible shall be corrected;
⑤ refrigeration pipe or components are installed in a position where they are unlikely to be exposed to any substance which may corrode refrigerant containing components, unless the components are constructed of materials which are inherently resistant to being corroded or are suitably protected against being so corroded.

Repairs to sealed components
DD.5.1 During repairs to sealed components, all electrical supplies shall be disconnected from the equipment being worked upon prior to any removal of sealed covers, etc. If it is absolutely necessary to have an electrical supply to equipment during servicing, then a permanently operating form of leak detection shall be located at the most critical point to warn of a potentially hazardous situation.

DD.5.2 Particular attention shall be paid to the following to ensure that by working on electrical components, the casing is not altered in such a way that the level of protection is affected. This shall include damage to cables, excessive number of connections, terminals not made to original specification, damage to seals, incorrect fitting of glands, etc.

Ensure that the apparatus is mounted securely.
Ensure that seals or sealing materials have not degraded to the point that they no longer serve the purpose of preventing the ingress of flammable atmospheres. Replacement parts shall be in accordance with the manufacturer's specifications.

Repair to intrinsically safe components
Do not apply any permanent inductive or capacitance loads to the circuit without ensuring that this will not exceed the permissible voltage and current permitted for the equipment in use.
Intrinsically safe components are the only types that can be worked on while live in the presence of a flammable atmosphere. The test apparatus shall be at the correct rating.
Replace components only with parts specified by the manufacturer. Other parts may result in the ignition of refrigerant in the atmosphere from a leak.
NOTE: The use of silicon sealant can inhibit the effectiveness of some types of leak detection equipment.
Intrinsically safe components do not have to be isolated prior to working on them.

Cabling
Check that cabling will not be subject to wear, corrosion, excessive pressure, vibration, sharp edges or any other adverse environmental effects. The check shall also take into account the effects of aging or continual vibration from sources such as compressors or fans.

Detection of flammable refrigerants
Under no circumstances shall potential sources of ignition be used in the searching for or detection of refrigerant leaks. A halide torch (or any other detector using a naked flame) shall not be used.

Leak detection methods
The following leak detection methods are deemed acceptable for systems containing flammable refrigerants.
Electronic leak detectors shall be used to detect flammable refrigerants, but the sensitivity may not be adequate, or may need re-calibration. (Detection equipment shall be calibrated in a refrigerant-free area.) Ensure that the detector is not a potential source of ignition and is suitable for the refrigerant used. Leak detection equipment shall be set at a percentage of the LFL of the refrigerant and shall be calibrated to the refrigerant employed and the appropriate percentage of gas (25% maximum) is confirmed.
Leak detection fluids are suitable for use with most refrigerants but the use of detergents containing chlorine shall be avoided as the chlorine may react with the refrigerant and corrode the copper pipe-work.
If a leak is suspected, all naked flames shall be removed/extinguished.
If a leakage of refrigerant is found which requires brazing, all of the refrigerant shall be recovered from the system, or isolated (by means of shut off valves) in a part of the system remote from the leak. Oxygen free nitrogen (OFN) shall then be purged through the system both before and during the brazing process.

Removal and evacuation

When breaking into the refrigerant circuit to make repairs – or for any other purpose – conventional procedures shall be used. However, it is important that best practice is followed since flammability is a consideration. The following procedure shall be adhered to:

① remove refrigerant;
② purge the circuit with inert gas;
③ evacuate;
④ purge again with inert gas;
⑤ open the circuit by cutting or brazing.

The refrigerant charge shall be recovered into the correct recovery cylinders. The system shall be “flushed” with OFN to render the unit safe. This process may need to be repeated several times. Compressed air or oxygen shall not be used for this task.

Flushing shall be achieved by breaking the vacuum in the system with OFN and continuing to fill until the working pressure is achieved, then venting to atmosphere, and finally pulling down to a vacuum. This process shall be repeated until no refrigerant is within the system. When the final OFN charge is used, the system shall be vented down to atmospheric pressure to enable work to take place. This operation is absolutely vital if brazing operations on the pipework are to take place.

Ensure that the outlet for the vacuum pump is not close to any ignition sources and there is ventilation available.

Charging procedures

In addition to conventional charging procedures, the following requirements shall be followed:

① Ensure that contamination of different refrigerants does not occur when using charging equipment. Hoses or lines shall be as short as possible to minimize the amount of refrigerant contained in them. Cylinders shall be kept upright.
② Ensure that the refrigeration system is earthed prior to charging the system with refrigerant.
③ Label the system when charging is complete (if not already).
④ Extreme care shall be taken not to overfill the refrigeration system. Prior to recharging the system, it shall be pressure tested with OFN. The system shall be leak tested on completion of charging but prior to commissioning. A follow up leak test shall be carried out prior to leaving the site.

Decommissioning

Before carrying out this procedure, it is essential that the technician is completely familiar with the equipment and all its detail. It is recommended good practice that all refrigerants are recovered safely. Prior to the task being carried out, an oil and refrigerant sample shall be taken in case analysis is required prior to re-use of reclaimed refrigerant. It is essential that electrical power is available before the task is commenced.

① Become familiar with the equipment and its operation.
② Isolate system electrically.
③ Before attempting the procedure ensure that:

- mechanical handling equipment is available, if required, for handling refrigerant cylinders;
- all personal protective equipment is available and being used correctly;

- the recovery process is supervised at all times by a competent person;
- recovery equipment and cylinders conform to the appropriate standards.

④ Pump down refrigerant system, if possible.
⑤ If a vacuum is not possible, make a manifold so that refrigerant can be removed from various parts of the system.
⑥ Make sure that cylinder is situated on the scales before recovery takes place.
⑦ Start the recovery machine and operate in accordance with manufacturer's instructions.
⑧ Do not overfill cylinders. (No more than 80 % volume liquid charge).
⑨ Do not exceed the maximum working pressure of the cylinder, even temporarily.
⑩ When the cylinders have been filled correctly and the process completed, make sure that the cylinders and the equipment are removed from site promptly and all isolation valves on the equipment are closed off.
⑪ Recovered refrigerant shall not be charged into another refrigeration system unless it has been cleaned and checked.

Labeling

Equipment shall be labeled stating that it has been decommissioned and emptied of refrigerant. The label shall be dated and signed. Ensure that there are labels on the equipment stating the equipment contains flammable refrigerant.

Recovery

When removing refrigerant from a system, either for servicing or decommissioning, it is recommended good practice that all refrigerants are removed safely. When transferring refrigerant into cylinders, ensure that only appropriate refrigerant recovery cylinders are employed. Ensure that the correct number of cylinders for holding the total system charge are available. All cylinders to be used are designated for the recovered refrigerant and labeled for that refrigerant (i.e. special cylinders for the recovery of refrigerant). Cylinders shall be complete with pressure relief valve and associated shut-off valves in good working order. Empty recovery cylinders are evacuated and, if possible, cooled before recovery occurs.
The recovery equipment shall be in good working order with a set of instructions concerning the equipment that is at hand and shall be suitable for the recovery of flammable refrigerants.
In addition, a set of calibrated weighing scales shall be available and in good working order. Hoses shall be complete with leak-free disconnect couplings and in good condition. Before using the recovery machine, check that it is in satisfactory working order, has been properly maintained and that any associated electrical components are sealed to prevent ignition in the event of a refrigerant release. Consult manufacturer if in doubt.
The recovered refrigerant shall be returned to the refrigerant supplier in the correct recovery cylinder, and the relevant Waste Transfer Note arranged. Do not mix refrigerants in recovery units and especially not in cylinders.
If compressors or compressor oils are to be removed, ensure that they have been evacuated to an acceptable level to make certain that flammable refrigerant does not remain within the lubricant. The evacuation process shall be carried out prior to returning the compressor to the suppliers. Only electric heating to the compressor body shall be employed to accelerate this process. When oil is drained from a system, it shall be carried out safely.

1.2 The Symbol Description of the Device

The precautions listed here are divided into the following types. They are quite important, so be sure to follow them carefully. Meanings of DANGER, WARNING, CAUTION and NOTE symbols.

Symbols	Meaning	Description
	WARNING	The symbol shows that this appliance uses a flammable refrigerant. If the refrigerant is leaked and exposed to an external ignition source, there is a risk of fire.
	WARNING	The symbol shows that this appliance uses a low burning velocity material. Please keep away from fire source.
	CAUTION	This symbol shows that the operation manual should be read carefully.
	CAUTION	This symbol shows that a service personnel should be handling this equipment with reference to the installation manual.
	CAUTION	This symbol shows that information is available such as the operating manual or installation manual.

1.3 Statement

To keep users under safe working condition and property safety, please follow the instructions below：

① Wrong operation may result in injury or damage;
② Please install the unit in compliance with local laws, regulations and standards;
③ Confirm power voltage and frequency;
④ The unit is only used with grounding sockets;
⑤ Independent switch must be offered with the unit.

1.4 Safety Factors

The following safety factors need to be considered:

① Please read the following warnings before installation;
② Be sure to check the details that need attention, including safety factors;
③ After reading the installation instructions, be sure to save them for future reference.

⚠ **Warning**

Make sure that the unit is installed safely and reliably.

 If the unit is not secure or not installed, it may cause damage. The minimum support weight required for installation is 21g/㎜²

 If the unit was installed in a closed area or limited space, please consider the size of room and ventilation to prevent suffocation caused by refrigerant leakage.

① Use a specific wire and fasten it to terminal block so that the connection will prevent pressure from being applied to parts.

② Wrong wiring will cause fire.

Please connect power wire accurately according to wiring diagram on the manual to avoid burnout of the unit or fire.

③ Be sure to use correct material during installing.

Wrong parts or wrong materials may result in fire, electric shock, or falling of the unit.

④ Install on the ground safely, please read installation instructions.

Improper installation may result in fire, electric shock, falling of the unit, or water leaking.

⑤ Use professional tools for doing electrical work.

If power supply capacity is insufficient or circuit is not completed, it may cause fire or electric shock.

⑥ The unit must have grounding device.

If power supply does not have grounding device, be sure not to connect the unit.

⑦ The unit should be only removed and repaired by professional technician.

Improper movement or maintenance of the unit may cause water leakage, electric shock, or fire. Please find a professional technician to do.

⑧ Don't unplug or plug power during operation. It may cause fire or electric shock.

⑨ Don't touch or operate the unit when your hands are wet. It may cause fire or electric shock.

⑩ Don't place heaters or other electrical appliances near the power wire. It may cause fire or electric shock.

⑪ The water must not be poured directly from the unit. Do not let water to permeate into the electrical components.

⚠ **Warning**

① Do not install the unit in a location where there may be flammable gas.

② If there is flammable gas around the unit, it will cause explosion.

According to the instruction to carry out drainage system and pipeline work. If drainage system or pipeline is defective, water leakage will occur. And it should be disposed immediately to prevent other household products from getting wet and damage.

③ Do not clean the unit while power is on. Turn off power before cleaning the unit. If not it may result in injury from a high-speed fan or electric shock.

④ Stop operating the unit once there is a problem or a fault code.

Please turn off power and stop running the unit. Otherwise it may cause electric shock or fire.

⑤ Be careful when the unit is not packed or not installed.

Pay attention to sharp edges and fins of heat exchanger.

⑥ After installation or repair, please confirm refrigerant is not leaking.

If refrigerant is not enough, the unit will not work properly.

⑦ The installation of external unit must be flat and firm.

Avoid abnormal vibration and noise.

⑧ Don’t put your fingers into fan and evaporator.

High speed running fan will result in serious injury.

⑨ This device is not designed for people who is physically or mentally weak (including children)

and who does not have experience and knowledge of heating and cooling system. Unless it is used under direction and supervision of professional technician, or has received training on the using of this unit. Children must use it under supervision of an adult to ensure that they use the unit safely. If power wire is damaged, it must be replaced by a professional technician to avoid danger.

2. OVER VIEW OF THE UNIT

2.1 Accessories Supplied With the Unit

After unpacking, please check if you have all the following components.

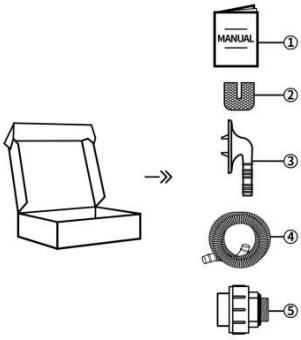

NO.	Components	Quantity	NO.	Components	Quantity
①	User Manual	1	④	Drain Pipe	1
②	U-type Rubber Blanket	4	⑤	Water Pipe Joint	2
③	Drain Connector	1			

2.2 Dimensions of the Unit

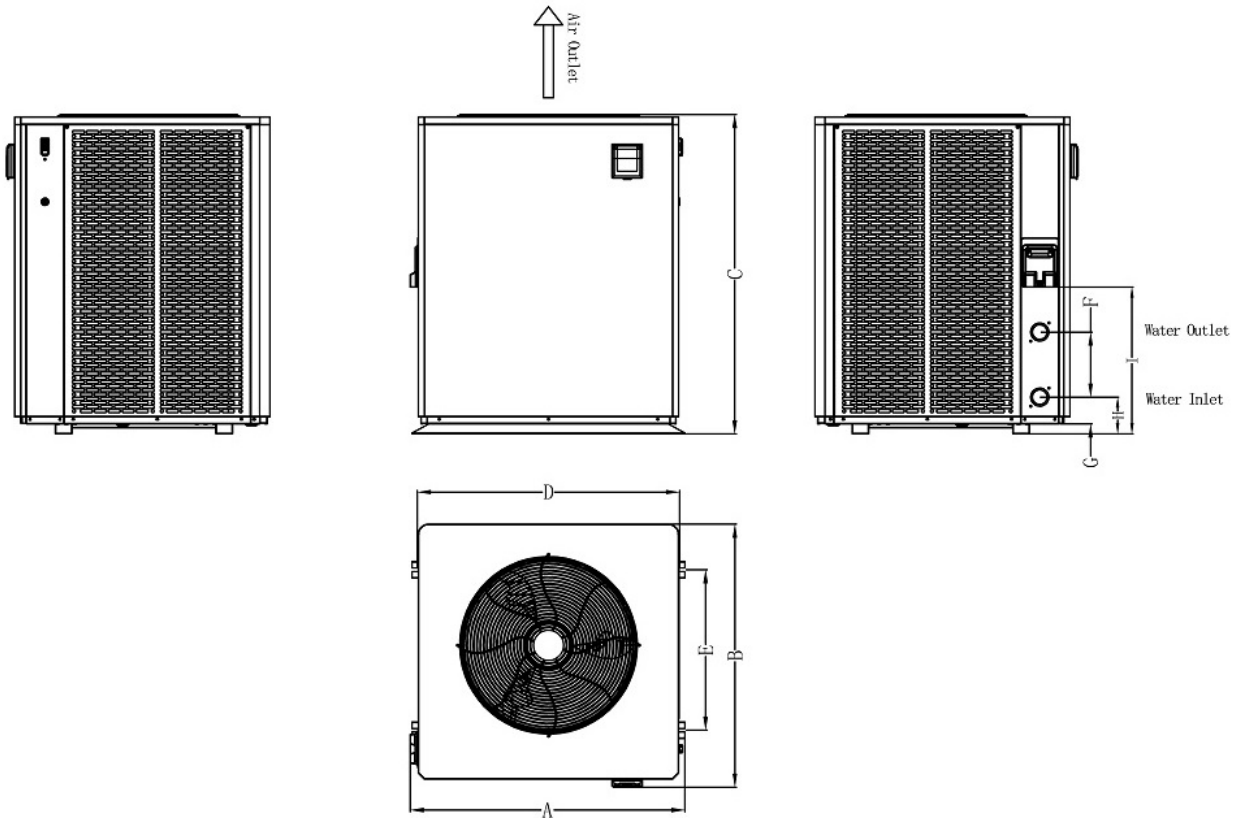

Dimension Unit: (mm)

Model	A	B	C	D	E	F	G	H	I
TDI 35	907	842	1052	865	530	215	88	122	486
TDI 45	913	869	1060	860	545	215	35	122	630

2.3 Main Parts of the Unit

TDI 35

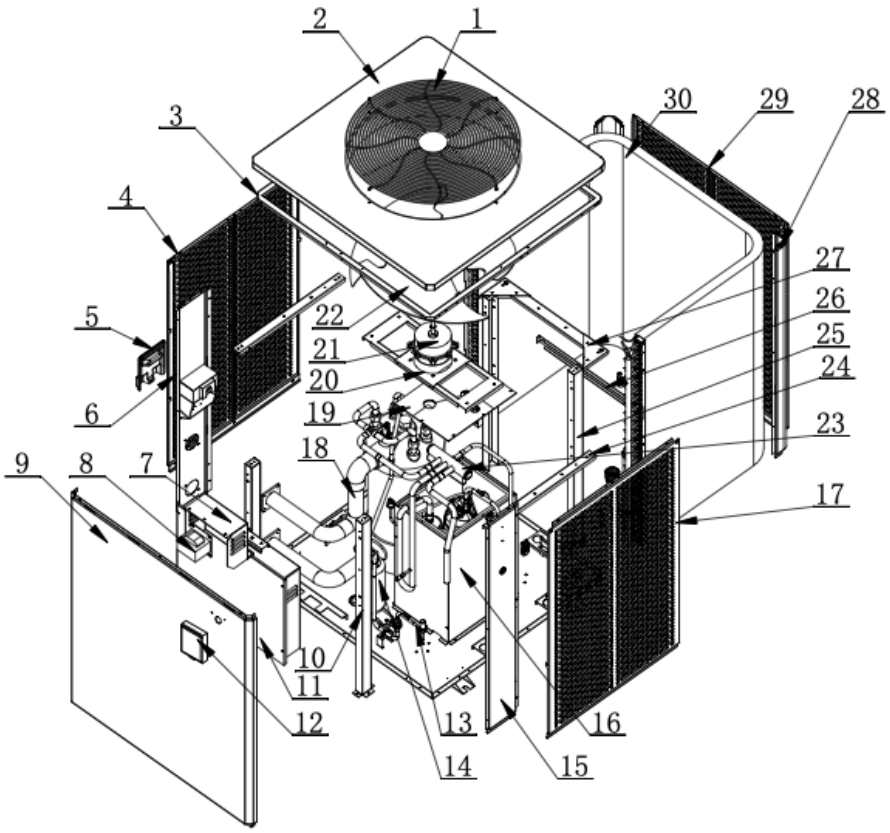

1	Mesh Cover	11	Electrical Box	21	Fan Motor
2	Top Cover	12	Wire Controller	22	Fan Blade
3	Top Frame	13	Throttling Device Assembly	23	4-Way Valve Assembly
4	Left Plate	14	Liquid Reservoir	24	Left/Right Crossbeam
5	Transition Pipe Handle	15	Right Column	25	Back Left/Right Column
6	Left Column	16	Compressor Compartment	26	Column Fixing Strip
7	Fixing Plate	17	Right Plate	27	Column Triangular Plate
8	Reactor	18	Titanium Heat Exchanger	28	Back Column
9	Front Plate	19	Compressor Compartment Cover	29	Back Plate
10	Front Left/Right Column	20	Motor Support	30	Fin Heat Exchanger

TDI 45

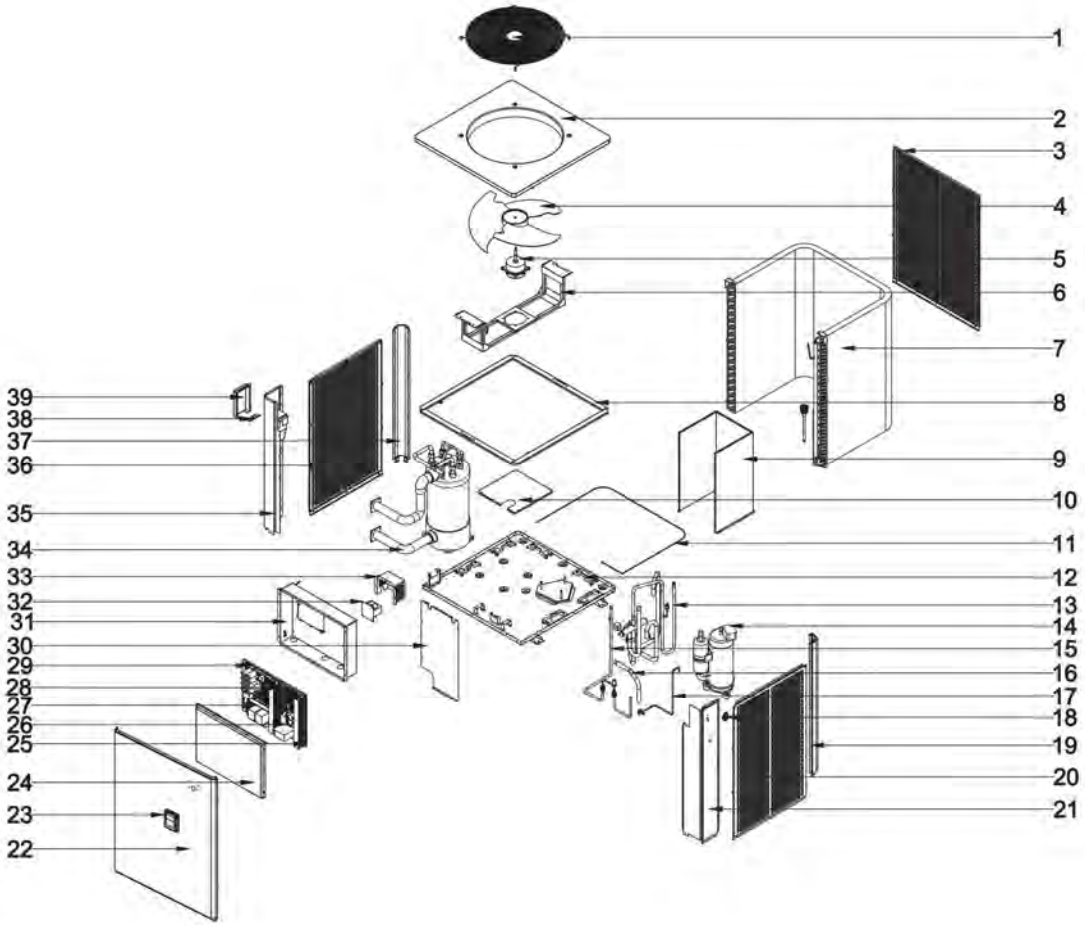

1	Mesh Cover	14	Compressor	27	Filter Board
2	Top Cover	15	Throttling Device Assembly	28	Control Motherboard
3	Back Panel	16	Condenser Inlet Pipe	29	Driver Board
4	Fan Blade	17	Shut-off Valve Inlet Assembly	30	Compressor Compartment Front
5	Motor	18	Probe Holder	31	Electrical Box
6	Motor Support	19	Back Column	32	Reactor
7	Fin Heat Exchanger	20	Left Plate	33	Reactor Protection Cover
8	Top Frame	21	Right Front Column	34	Titanium Heat Exchanger
9	Compressor Compartment Back	22	Front Plate	35	Left Front Pillar
10	Compressor Compartment Cover	23	Wire Controller Assembly	36	Left Plate
11	Chassis Heating Tapes	24	Electric Box Cover	37	Back Pillar
12	Chassis	25	Electrical Mounting Plate	38	Power Cable Fixing Plate
13	4-Way Valve Assembly	26	Thermal Relays	39	Junction Box Cover Plate

2.4 Parameter of the Unit

Model	TDI 35	TDI 45
Heating Condition #1 : Ambient 27˚C, Inlet/Outlet: 26/28˚C, Humidity 80%		
Heating capacity (kW)	34.80	45.01
Power input (kW)	0.74~5.39	0.75~7.37
C.O.P.	15.62~6.46	14.97~6.10
Heating Condition #2 : Ambient 15˚C, Inlet/Outlet: 26/28˚C, Humidity 70%		
Heating capacity (kW)	25.90	30.18
Power input (kW)	1.35~5.44	1.13~6.69
C.O.P.	6.99~4.76	7.04~4.51
General Info		
Max Power Input (kW)	6.0	7.6
Max Current(A)	10.6	13.4
Power supply	400V/3N/50Hz	
Controller	LED IOT	
Water Temp. Heating Mode (˚C)	40	
Water Temp. Cooling Mode (˚C)	8~28	
Running Ambient Temp. (˚C)	-10~43	
Refrigerant	R32	
Compressor Brand	Mitsubishi	
Gas Control	EEV	
4-Way Valve	Yes	
Heat Exchanger	Titanium in PVC	
Water Pipe Connection (mm)	40/50	
Fan Type	Vertical	
Case Design	Rectangular	
Noise Level at 1m dB(A)	46~62	46~62
Water Flow LPM (Litres Per Minute)	235	300
Net Weight (kg)	141	156
Net Dimension (mm)	907x842x1052	913x869x1060

3. INSTALLATION AND CONNECTION

⚠ **WARNING:** The heat pump must be installed by a professional team. The users are not qualified to install by themselves, otherwise the heat pump might be damaged and risky for users' safety.
This section is provided for information purposes only and must be checked and adapted if necessary according to the actual installation conditions.

3.1 Transportation

1. When storing or moving the heat pump, the heat pump should be at the upright position.

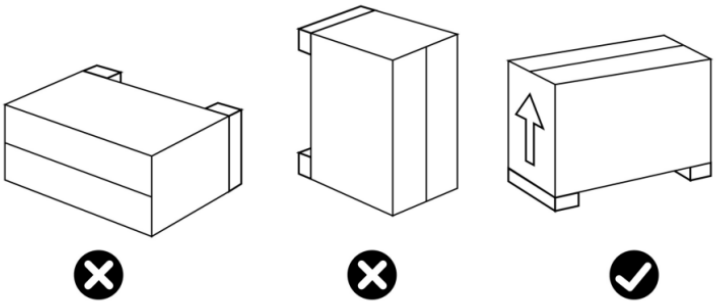

2. When moving the heat pump, do not lift the water union since the titanium heat exchanger inside the heat pump will be damaged.

3.2 Notice Before Installation

1. The inlet and outlet water unions can't bear the weight of soft pipes. The heat pump must be connected with hard pipes!

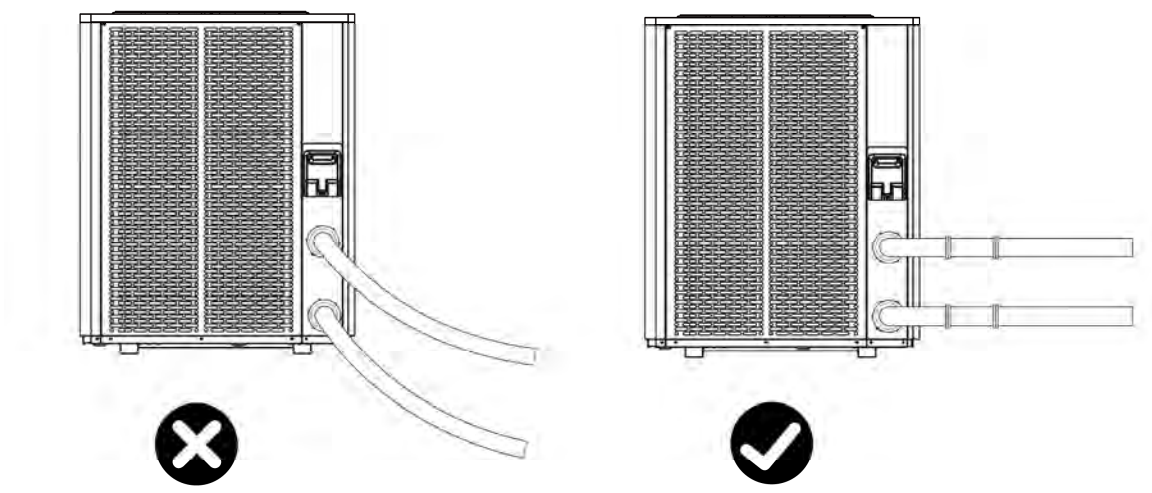

2. In order to guarantee the heating efficiency, the water pipe length should be ≤10m between the pool and the heat pump.

3.3 Installation Instruction

3.3.1 Pre-requirements

Equipment necessary for the installation of your heat pump:

① Power supply cable suitable for the unit's power requirements.

② A By-Pass kit and an assembly of PVC tubing suitable for your installation as well as pvc primer & pvc solvent, PVC adhesive and sandpaper.

③ A set of wall plugs and expansion screws suitable to attach the unit to your support.

④ Suitable fastening studs may be used to raise the unit.

3.3.2 Heat Pump Installation

① The unit can be fixed by bolts (M10) to concrete foundation or brackets. The concrete foundation must be solid; the bracket must be strong enough and anti-rust treated;

② The heat pump needs a water pump (Supplied by the user). The recommended pump specification-flux: refer to Technical Parameter, Max. lift ≥10m;

③ When the heat pump is running, there will be condensation water discharged from the bottom, please pay attention to it. Please insert the drainage tube (accessory) into the hole and clip it well, then connect a pipe to drain off the condensation water. Install the heat pump, raising it at least 10 cm with solid water-resistant pads, then connect the drainage pipe to the opening located under the pump.

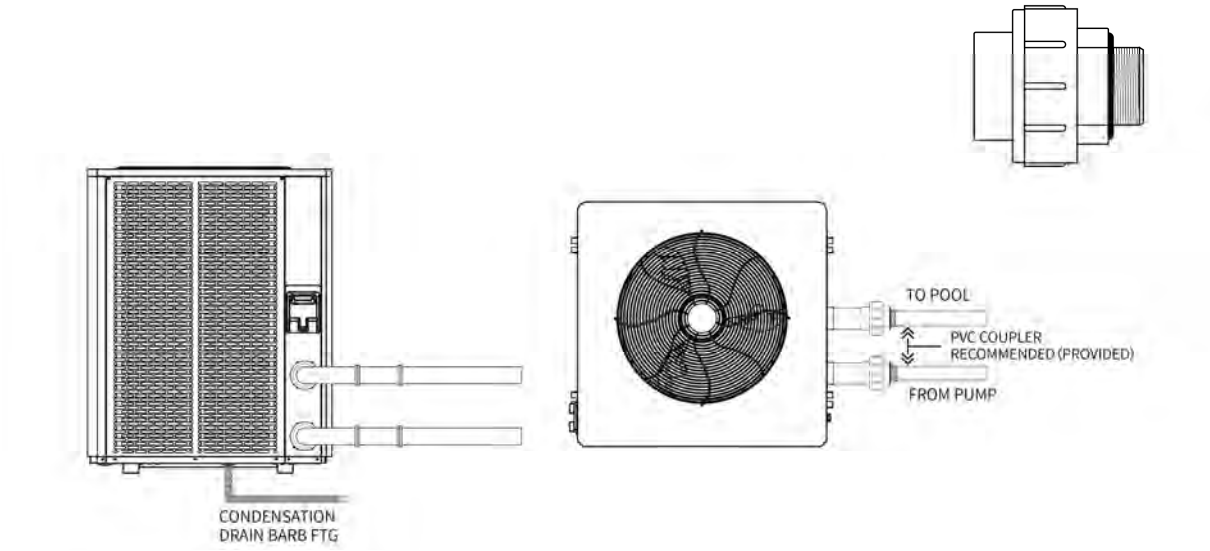

④ There are two methods to fixed heat pump chassis.

Method 1: Sheet metal foot fixed.

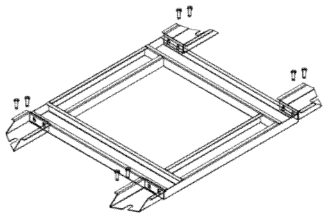

Method 2: Rubber blanket fixed.

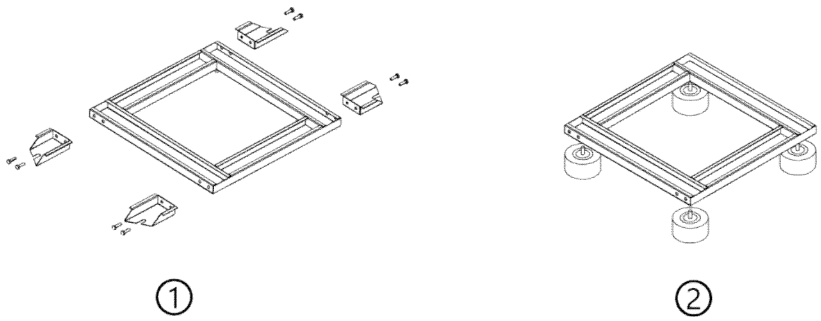

3.3.3 Location and Space

Please comply with the following rules concerning the choice of heat pump location.

① The unit's future location must be easily accessible for convenient operation and maintenance.

② It must be installed on the ground, fixed ideally on a level concrete floor. Ensure that the

floor is sufficiently stable and can support the weight of the unit.

③ A water drainage device must be provided close to the unit in order to protect the area where it is installed.

④ If necessary, the unit may be raised by using suitable mounting pads designed to support its weight.

⑤ Check that the unit is properly ventilated, that the air outlet is not facing the windows of neighbouring buildings and that the exhaust air cannot return. In addition, provide sufficient space around the unit for servicing and maintenance operations.

⑥ The unit must not be installed in an area exposed to oil, flammable gases, corrosive products, sulphur compounds or close to high frequency equipment.

⑦ To prevent mud splashes, do not install the unit near a road or track.

⑧ To avoid causing nuisance to neighbors, make sure the unit is installed so that it is positioned towards the area that is least sensitive to noise.

⑨ Keep the unit as much as possible out of the reach of children.

⑩ Installation space:

Unit: mm

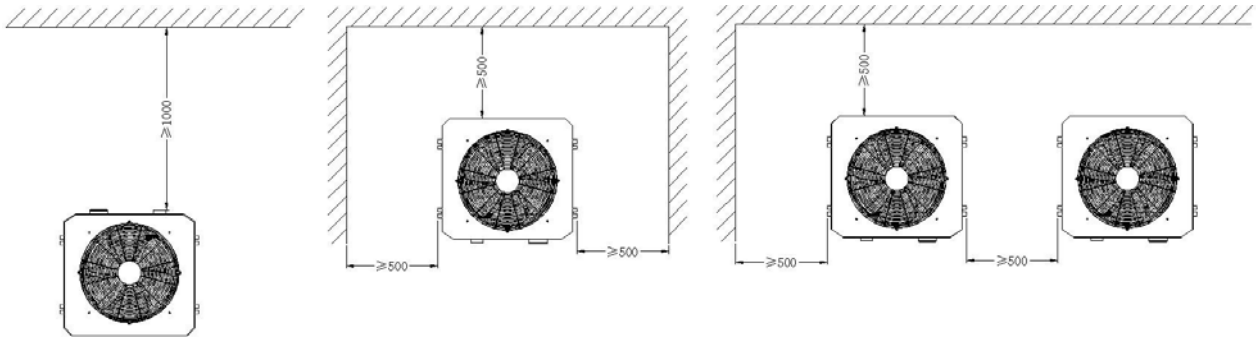

Do not put anything less than one meter in front of the heat pump.

Leave 500 mm of empty space on the sides and back of the heat pump and free ventilation above.

Do not leave any obstacles on the device!

3.3.4 Installation Layout

Notice: The filter must be cleaned regularly to ensure that water in the system is clean and avoid blocking of filter. It is necessary that drainage valve is fixed on the lower water pipe. If the unit is not running during winter months, please disconnect power supply and let out drain water from unit through drainage valve. If ambient temperature of running unit is below 0℃, please keep water pump running.

The installation diagram is shown in the following figure:

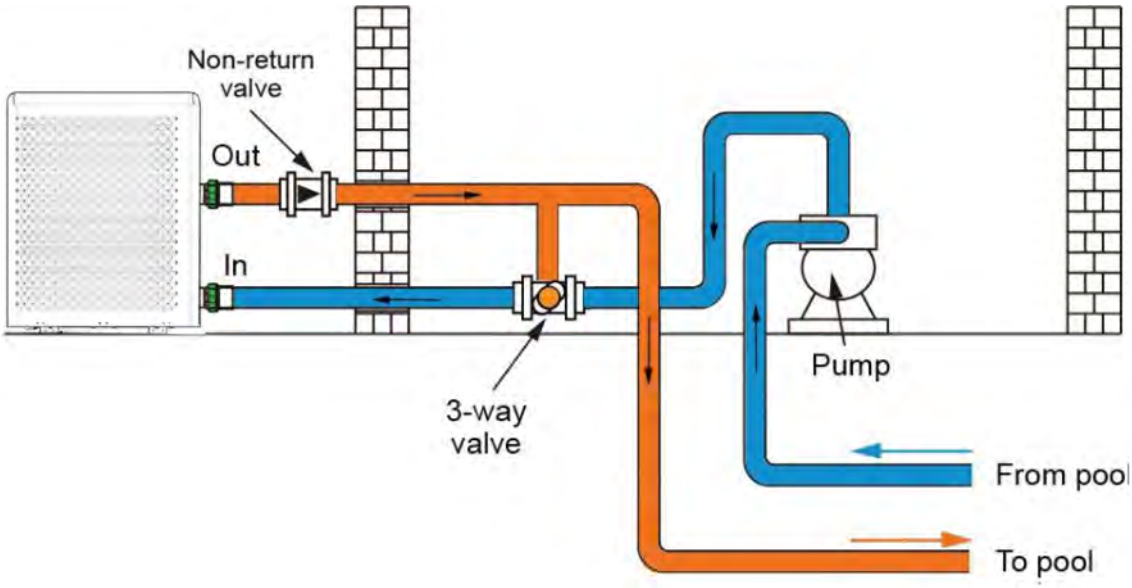
Non-return
valve
Out
In
3-way
valve
Pump
From pool
To pool

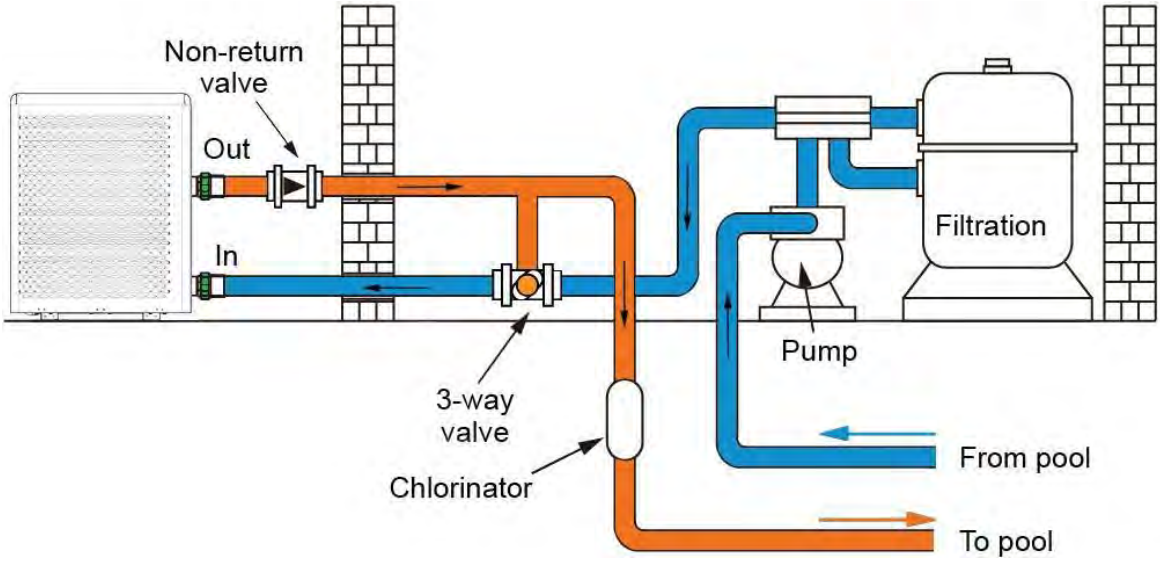
Non-return
valve
Out
In
Filtration
Pump
3-way
valve
Chlorinator
From pool
To pool

SINGLE INSTALLATION DIAGRAM:

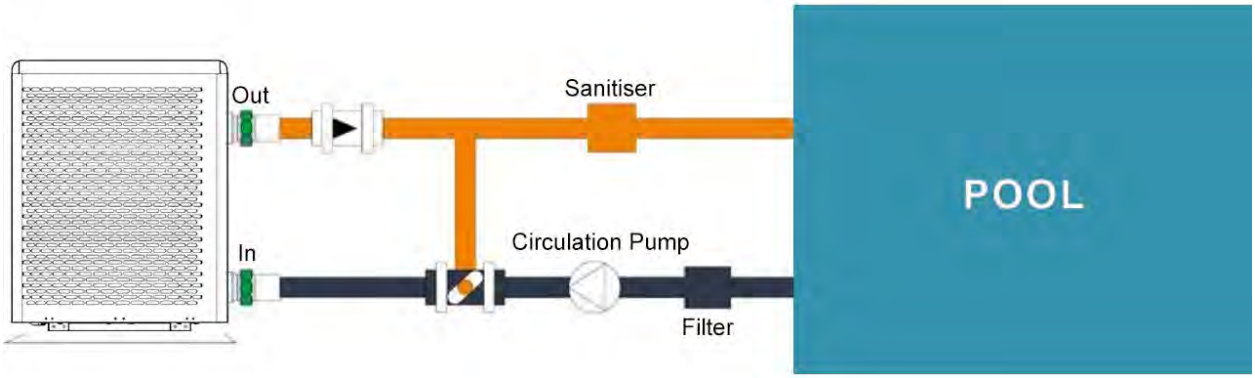

SERIAL INSTALLATION DIAGRAM:

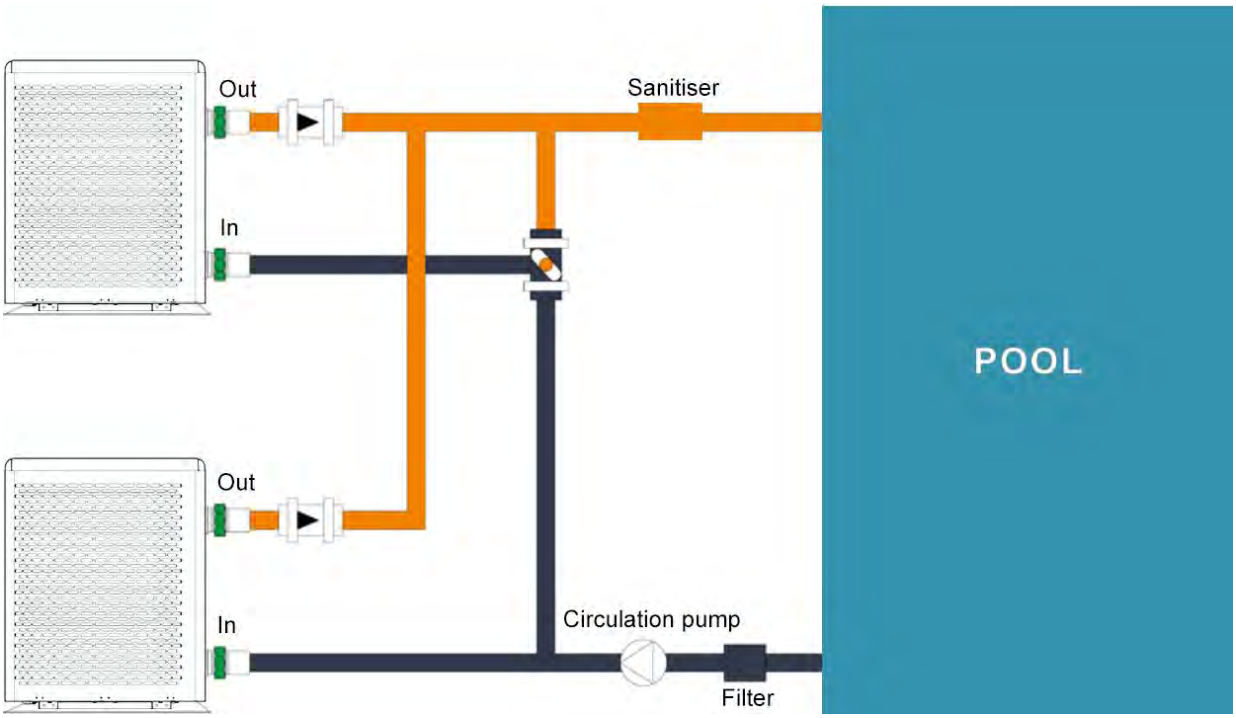

3.3.5 Electrical Installation

This unit must be electrically connected following the AS/NZS 3000 Wiring rules!

To function safely and maintain the integrity of your electrical system, the unit must be connected to a general electricity supply in accordance with the following regulations:

① Upstream, the general electricity supply must be protected by a 30mA differential switch.
② The heat pump must be connected to a suitable D-curve circuit breaker in accordance with current standards and regulations in the country where the system is installed.
③ The electricity supply cable must be adapted to match the unit's rated power and the length

of wiring required by the installation. The cable must be suitable for outdoor use.

④ For a three-phase system, it is essential to connect the phases in the correct sequence. If the phases are inverted, the heat pump's compressor will not work.

⑤ In places open to the public, it is mandatory to install an emergency stop button close to the heat pump.

Model	Power Supply Wires		
	Electricity Supply	Cable Diameter	Specification
TDI 35	380-415V/3N~/50Hz	5G 6.0mm²	AWG 10
TDI 45	380-415V/3N~/50Hz	5G 6.0mm²	AWG 10

3.3.6 Electrical Connection

⚠ **WARNING:** Power supply of heat pump must be disconnected before any operation.

Please comply with the following instruction to connect heat pump.

Step 1: Detach electrical side panel by a screwdriver to access electrical terminal block.

Step 2: Insert cable into heat pump unit port.

Step 3: Connect power supply cable to terminal block according to the diagram below in 3.3.7.

3.3.7 Third Party Controllers & Pool Pump connections

Adding a third party controller to your heat pump is highly recommended. It is the preferred method to ensure smooth operation with a standalone pool pump as it means the pool pump does not need to have the power plug removed. In some instances, removing a power plug from a pool pump will void the manufacturers warranty - please check with your pool pump supplier / manufacturer before directly connecting a pool pump to this unit.

For ease of install the 3rd party controller should be connected to 1 & 2 on the power block. Please note connecting a pool pump to this connection will not power the pump.

Please comply with the following instruction to connect heat pump.

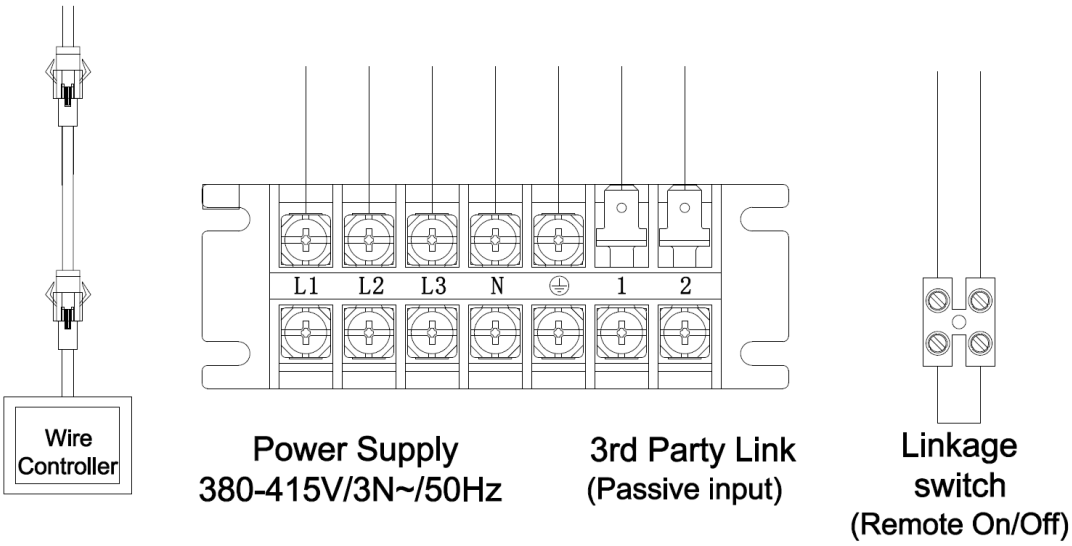

TDI 35

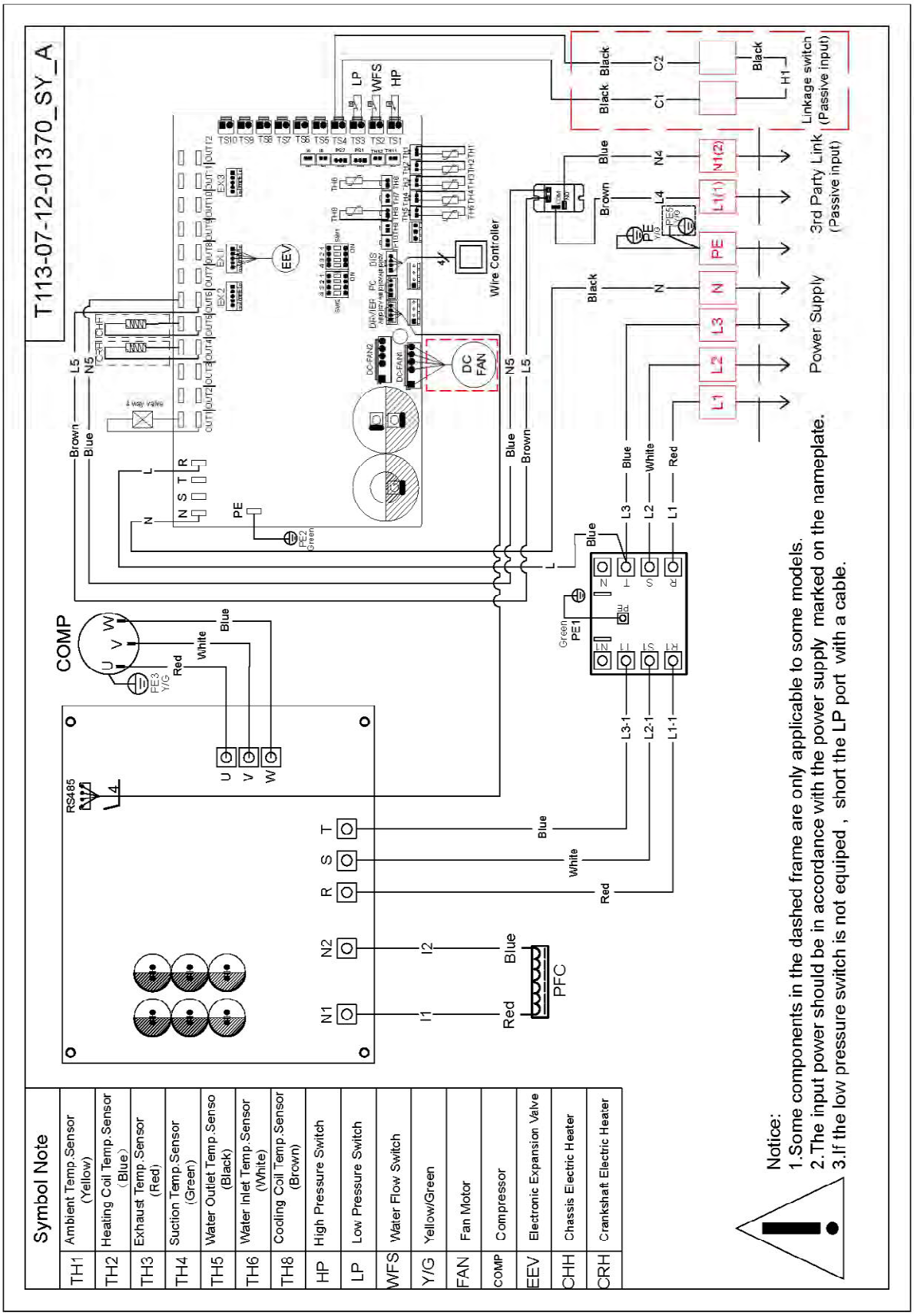
T113-07-12-01370_SY_A
Symbol Note
TH1 Ambient Temp.Sensor (Yellow)
TH2 Heating Coil Temp.Sensor (Blue)
TH3 Exhaust Temp.Sensor (Red)
TH4 Suction Temp.Sensor (Green)
TH5 Water Outlet Temp.Senso (Black)
TH6 Water Inlet Temp.Sensor (White)
TH8 Cooling Coil Temp.Sensor (Brown)
HP High Pressure Switch
LP Low Pressure Switch
WFS Water Flow Switch
Y/G Yellow/Green
FAN Fan Motor
COMP Compressor
EEV Electronic Expansion Valve
CHH Chassis Electric Heater
CRH Crankshaft Electric Heater
Notice:
1.Some components in the dashed frame are only applicable to some models.
2.The input power should be in accordance with the power supply marked on the nameplate.
3.If the low pressure switch is not equiped , short the LP port with a cable.
Power Supply
3rd Party Link (Passive input)
Linkage switch (Passive input)
Wire Controller
DC FAN
COMP
PFC
EEV
4 way valve
RS485

TDI 45

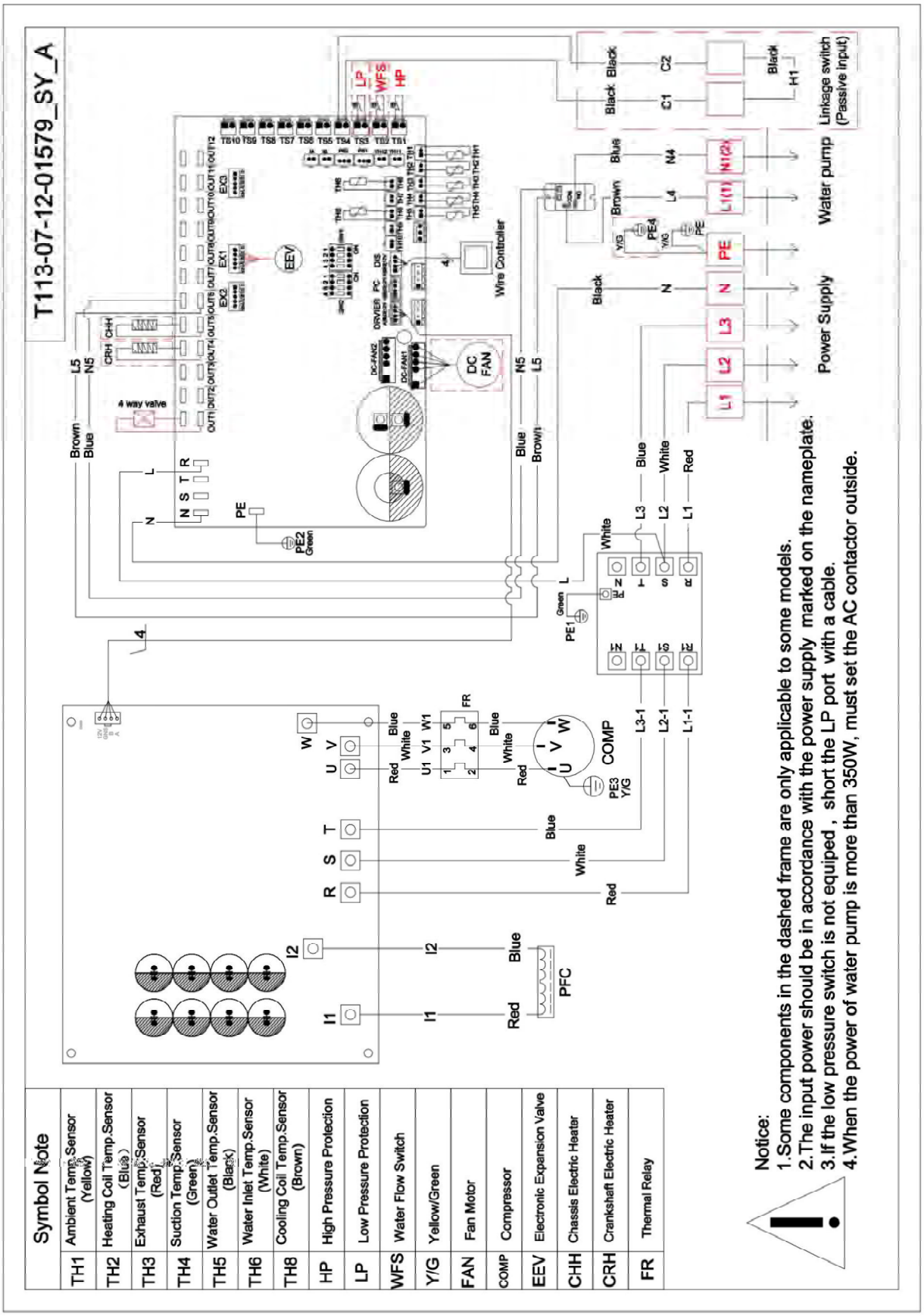
T113-07-12-01579_SY_A
Symbol Note
TH1 Ambient Temp.Sensor (Yellow)
TH2 Heating Coil Temp.Sensor (Blue)
TH3 Exhaust Temp.Sensor (Red)
TH4 Suction Temp.Sensor (Green)
TH5 Water Outlet Temp.Sensor (Black)
TH6 Water Inlet Temp.Sensor (White)
TH8 Cooling Coil Temp.Sensor (Brown)
HP High Pressure Protection
LP Low Pressure Protection
WFS Water Flow Switch
Y/G Yellow/Green
FAN Fan Motor
COMP Compressor
EEV Electronic Expansion Valve
CHH Chassis Electric Heater
CRH Crankshaft Electric Heater
FR Thermal Relay
Notice:
1.Some components in the dashed frame are only applicable to some models.
2.The input power should be in accordance with the power supply marked on the nameplate.
3.If the low pressure switch is not equiped , short the LP port with a cable.
4.When the power of water pump is more than 350W, must set the AC contactor outside.
Power Supply
Water pump
Linkage switch (Passive input)
Wire Controller
DC FAN
EEV
4 way valve
COMP
PFC

3.4 Trial After Installation

⚠ **WARNING:** Please check all the wiring carefully before turning on the heat pump.

3.4.1 Inspection Before Trial Running

Before running test, confirm below items and write √ in block;

□	Correct unit installation
□	Power supply voltage is the same as unit rated voltage
□	Correct piping and wiring
□	Air inlet & outlet port of unit is unblocked
□	Drainage and venting is unblocked and no water leaking
□	Leakage protector is working
□	Piping insulation is working
□	Ground wire is connected correctly

3.4.2 Trial Running

Step 1: Running test can begin after completing all installation;

Step 2: All wiring and piping should be connected well and carefully checked, then fill water tank with water before power is switched on;

Step 3: Emptying all air within pipes and water tank, press “on-off” button on control panel to run the unit at setting temperature;

Step 4: Items need to be checked during running test:

① During the first running, unit current is normal or not;
② Each function button on control panel is normal or not;
③ Display screen is normal or not;
④ Are there any leakage in the whole heating circulation system;
⑤ Condensate drain is normal or not;
⑥ Are there any abnormal sound or vibration during running?

4. REMOTE CONTROLLER OPERATION GUIDANCE

4.1 Control Panel Diagram

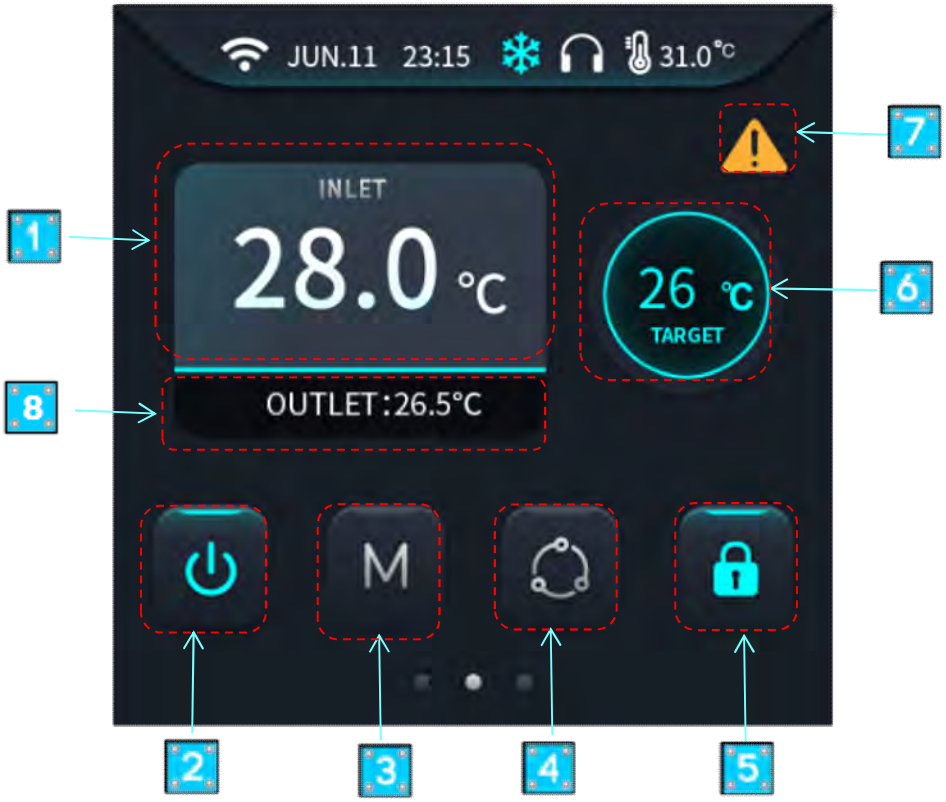

Basic Icons

① Inlet Water Temperature

② ON/OFF

③ Mode

④ Frequency Setting

⑤ Lock/Unlock

⑥ Target Temp. Setting

⑦ Current Faults:

⑧ Outlet Water Temperature

Icon Table:

Icon	Meaning	Remark	Icon	Meaning	Remark
	Internet Status	Display according to the signal strength		Fault Icon	Blinking
	Heating Mode	Dynamic represents the unit working		Silent Mode	Static
	Automatic Mode	Dynamic represents the unit working		Powerful Mode	Static

	Cooling Mode	Dynamic represents the unit working		Smart Mode	Static
	Defrosting Mode	Static		Remote Icons	Blinking in effect

4.2 Key Operating Instruction

4.2.1 Target temperature setting

Click on the target temperature setting icon, then you can enter the value, and finally click on the "OK" button to save it.

4.2.2 ON/OFF Function

At the main interface,Click the“ ”button to turn the unit ON or OFF.

4.2.3 Mode Selection Function

Click on the “Mode” button to enter mode interface and select the desired mode.

①

: Heating Mode

②

: Automatic Mode

③ 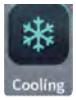

: Cooling Mode

④

: Defrosting

⑤
: Return Button

One-Key Defrosting: Click “

” , the icon will lights up and the icon will go out after the unit completes defrosting.

Notice: Defrosting is not available in cooling mode

4.2.4 Frequency settings

Click the “ ” button to enter the frequency setting interface.

There are three modes: Boost, Silent and Smart.

4.2.5 Lock screen function

At the main interface, press “ ” to lock or unlock.

4.2.6 Current faults

a. When the unit is malfunctioning, the fault icon“ ” on the main interface flashes, click on the fault icon to enter the fault inquiry page;

b. Fault support up to 3 pages of data query, the number of pages displayed according to the number of current fault decisions;

c. The current fault will display fault icon + fault code + fault name.

4.2.7 Status Inquiry

At the main interface, swipe from right to left to check the current running status.

4.2.8 Setting interface

Swipe to the right on the main interface and enter the settings interface.

4.2.9 Display Interface

At the settings interface, press “ ” to enter the display interface.

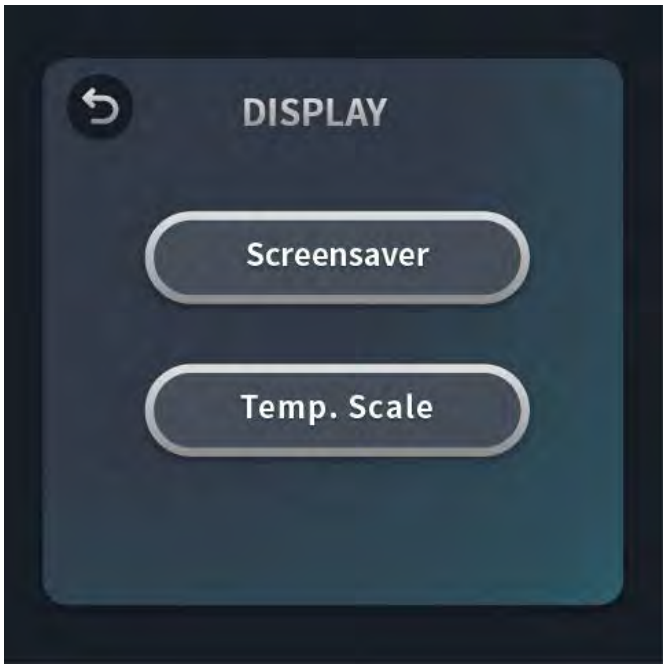

 Screen Protection Interface

a. The screen protection function is on:

The display will switch to the screen protection interface when there is no operation for five minutes, and then automatically turn off after two minutes without any operation;

b. The screen protection function is off:

The display will automatically turn off after five minutes without any operation.

c.When the display screen is powered off:

a) The screen protection function is on: Click anywhere on the screen, and the screen displays the screen protection interface, you need to click on the screen again to exit the screen protection and enter the main interface;

b) The screen protection function is off: Click anywhere on the screen, and the screen will light up and automatically enter the main interface.

 Temperature unit setting

Click on °C or °F to toggle the temperature unit.

4.2.10 System Parameters

At the settings interface, press “ ” to enter the password interface.

 Restore factory settings

Enter "400866" in the password interface that will automatically pop up a window prompting whether to restore the factory settings;

 History faults inquiry

a. Enter "589" in the password interface to view the history faults;

b. Up to 48 groups of history faults can be saved;

c. Display contents: Fault name + The time when the fault occurred

d. The history faults have a power-down memory function and will not be saved if cleared manually;

e. Click the "Fault Clear "Key, it will automatically clear the fault.

- User parameter setting

Enter "168" in the password interface to enter the user parameters.

4.2.11 General parameters

- View version number:

Including Display hardware version, Display software version and Motherboard Checksum.

- Wi-Fi connection :

There is a QR code for WiFi connection.

4.2.12 Time settings

- Clock

Click on "Clock"to enter the time setting interface.

Once connected to WiFi, the controller automatically updates the system time daily at 06:00.

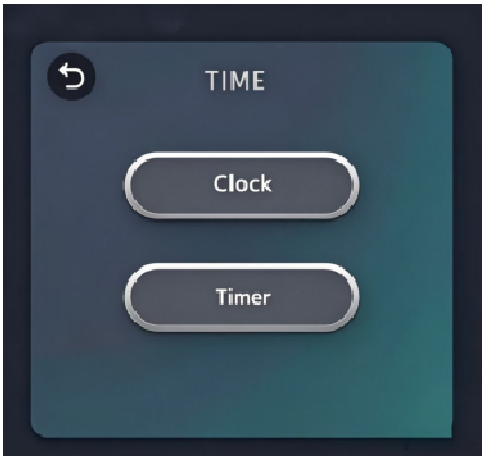

- Timer

Click on " Timer " to enter the Timer ON/OFF setting interface.

a. Timer on/off setting time range: 8*24;

b. The timer function is not enabled if the timing on is the same as timing off;

c. The timer function is not enabled when the timer switch is not turned on;

d. The NO group means timed on, The OFF group means timed off;

4.2.13 Curve

a. Slide to the rightmost interface to enter the curve display ;
b. The curve is updated every hour, displaying data for up to 7 days;
c. If the power outage exceeds 7 days, the curve will be cleared, and the data will display 0 within the power outage period of less than 7 days;
d. The latest data is on the far right of the curve.

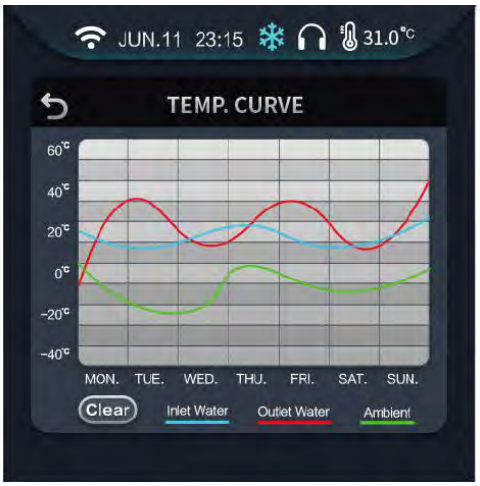

4.2.14 Power consumption query

Click the button "power statistics" to enter the electricity statistics query interface.
Click the left square to view the current power parameters of the unit (voltage, current, power)

View power consumption statistics

Click the button on the right to view historical power consumption statistics, as shown below. Click the option bar above to switch between daily, monthly, and annual power consumption.

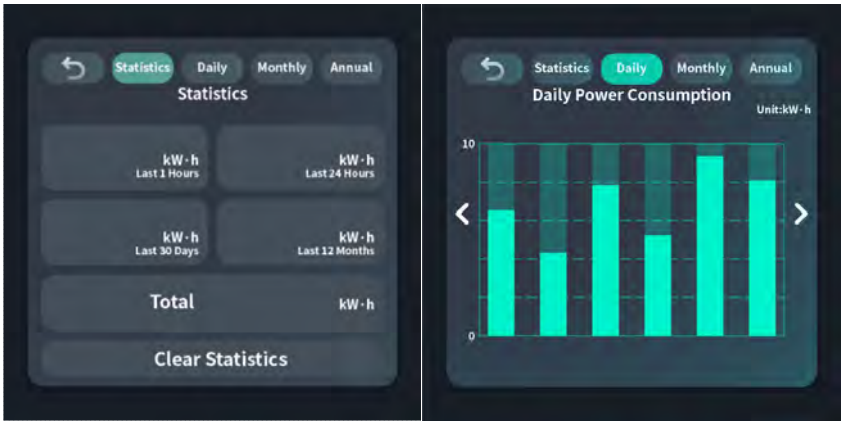

4.3 System Parameters

Para. A (Setting Temperature)

Code	Meaning	Unit	Range
A01	Heating target	℃	15~40
A02	Cooling target	℃	8~28
A03	Automatic target	℃	8~40
A10	Temperature compensation	℃	-10~10℃

Para.B (System Parameters)

Code	Meaning	Unit	Range
B02	Remote monitoring address	/	0~255
B11	LED Light	/	0～1

Para. P (Water Pump Parameter)

Code	Meaning	Unit	Range
P01	Water Pump mode	/	0~5 (0. Keep running at constant Temp. 1. Keep running at constant Temp. for 2 Min. and then off. 2. Run water pump at intervals at constant Temp. 3. Shared unit water pump, keep running at constant Temp. 4. Shared unit water pump, keep running at constant Temp. for 2 Min. and then off. 5. Shared unit pump, run water pump at intervals at constant Temp.)

P02	Pump interval time	/	0~120min

Para. O (Status Parameter)

Code	Meaning	Unit
O01	Water Pump	/
O02	Compressor	/
O03	Fan High Speed	/
O04	4-Way Valve	/
O05	Fan Medium Speed	/
O06	Fan Low Speed	/
O07	DHW Tank Electric Heater	/
O08	Crankshaft Electric Heater	/
O09	Chassis Heater	/
O10	EVI Valve	/
O11	Water Supply Valve	/
O12	Water Return Valve	/

Para. S (Status Parameter)

Code	Meaning	Unit
S01	Linkage switch	/
S02	Water Flow Switch	/
S03	Low Pressure Switch 1	/
S04	High Pressure Switch 1	/
S05	Low Water Lever Switch	/
S06	High Water Lever Switch	/
S07	Low Pressure Switch 2	/
S08	High Pressure Switch 2	/
S09	Code Switch S1	/
S10	Code Switch S2	/
S11	Code Switch S3	/
S12	Code Switch S4	/
S13	Code Switch S5	/
S14	Code Switch S6	/
S15	Code Switch S7	/
S16	Single&Double System	/

Para. S (Temp. Status Parameter)

Code	Meaning	Unit
T01	Compressor Frequency	Hz
T02	Inlet Water Temp.	℃
T03	Coil Temp.	℃
T04	Exhaust Temp.	℃
T05	Suction temp.	℃
T06	Cooling Coil Temp.	℃
T07	Ambient Temp.	℃
T08	Outlet Water Temp.	℃
T09	Main EEV 1 Steps	P
T10	AC Voltage	V
T11	AC Current	A
T12	DC Bus Voltage	V
T13	Compressor (Comp.) Current	A
T14	IPM Temp.	℃
T15	DC Fan 1 Speed	/
T16	DC Fan 2 Speed	/
T17	DHW Tank Temp.	℃
T18	Return Water Temp.	℃
T19	Auxiliary EEV 1 Steps	P
T20	Main EEV 2 Steps	P
T21	Auxiliary EEV 2 Steps	P
T22	High Pressure Value	/
T23	Low Pressure Value	/
T24	High Pressure Saturation Temp.	℃
T25	Power consumption within 10 minutes	/

4.4 Fault & Protection

When the unit is faulty, some faults will cause the display to have an alarm output, and the icon "⚠" will flash,click the fault icon button to view the current fault.

When another part of the fault occurs, the display will not alarm and the icon "⚠" will not flash.

-.- is displayed when the temperature sensor is faulty.

Code	Meaning	Code	Meaning
E01	Wire Controller Communication Fault	E41	DC Current Protection
E02	Water Flow Fault	E42	High Pressure Fault
E03	High Pressure Protection	E43	Low Pressure Fault
E04	Low Pressure Protection	E44	Return Water Fault
E06	Driver Communication Fault	E49	High Pressure Switch Fault (Locked After 3 Occurrences)
E07	DC Fan Communication Fault	E50	Low Pressure Switch Fault (Locked After 3 Occurrences)
E10	Inlet Water Temperature Sensor Fault	E52	High Discharge Temperature Protection (Locked After 3 Occurrences)
E11	Outlet Water Temperature Sensor Fault	E53	Water Flow Fault (Locked After 3 Occurrences)
E13	Ambient Temperature Sensor Fault	E54	DC Fan Fault (Locked After 3 Occurrences)
E15	Suction Temperature Sensor Fault	E78	Low Pressure Protection (Cooling) (Locked After 3 Occurrences)
E16	Discharge Temperature Sensor Fault	E79	Low Outlet Water Temperature Protection (Cooling) (Locked After 3 Occurrences)
E17	Outdoor Coil Temperature Sensor Fault (Heating)	E80	AC Current Protection (Locked After 3 Occurrences)
E18	Indoor Coil Temperature Sensor Fault (Cooling)	F01	AC Input Overcurrent Shutdown
E22	High Coil Temperature Protection (Cooling)	F02	AC Input Over/Under Voltage Protection
E23	Low Indoor Coil Temperature Protection (Cooling)	F03	Transformer 15V Output Over/Under Voltage Protection
E24	High Outlet Water Temperature Protection (Heating)	F13	IPM Overtemperature Protection
E25	Low Outlet Water Temperature Protection (Cooling)	F15	Compressor Overcurrent
E26	Inlet and Outlet Water Temperature Difference Protection	F20	PFC Fault
E27	High Discharge Temperature Protection	F21	IPM Fault
E30	Low Ambient Temperature Protection (Heating/Cooling)	F25	DC Bus Overvoltage
E31	High Pressure Switch Fault	F26	DC Bus Undervoltage
E32	Low Pressure Switch Fault	F38	DC Fan 1 Fault
E33	Phase Sequence Error	F43	DC Fan 2 Fault

E34	Phase Sequence Error (Phase A)	F44	Compressor Driver Fault (Excluding IPM)
E35	Phase Sequence Error (Phase B)	F45	IPM Protection (Permanent)
E36	Phase Sequence Error (Phase C)	F46	Driver Protection (Permanent)
E37	AC Current Protection	F47	IPM Temperature Protection
E38	AC Voltage Protection	F48	IPM Overtemperature Protection
E39	DC Voltage Protection	F74	Driver Fault (Locked After 3 Occurrences)
E40	Phase Current Protection	F75	Compressor Phase Current Protection (Locked After 3 Occurrences)

5. Wi-Fi Settings

5.1 Download and Register

(1) You can download Eco-Home in Google store or Apple store.

(2) You also can scan up this QR code to download Eco-Home.

(3) If you have account number,you can just log in,if not,please sign up a new account number.

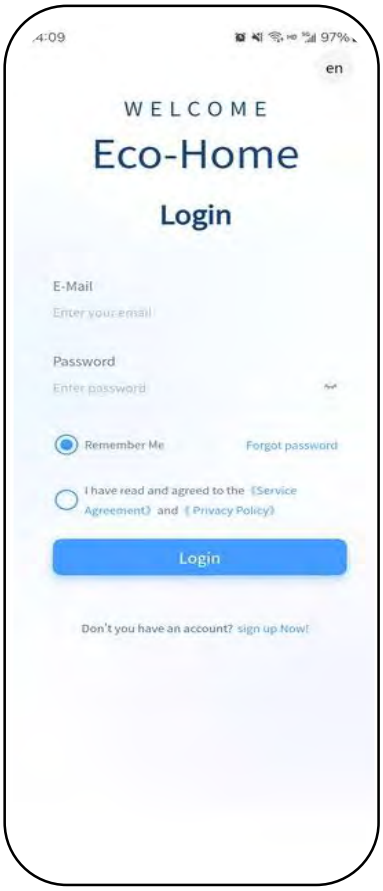

5.2 Add device and share device

(1) When you in the Eco-Home interface,please click the “+” sign in the upper right corner and insure the WIFI icon of the wire controller is flashing.(If the WIFI icon isn’t flashing,please click the WIFI Reset)

(2) When you're done with the wire controller,click Confirm on your phone and start the network distribution. Please read the network distribution conditions carefully. Then, the system will automatically identify the WiFi in the WiFi information section.

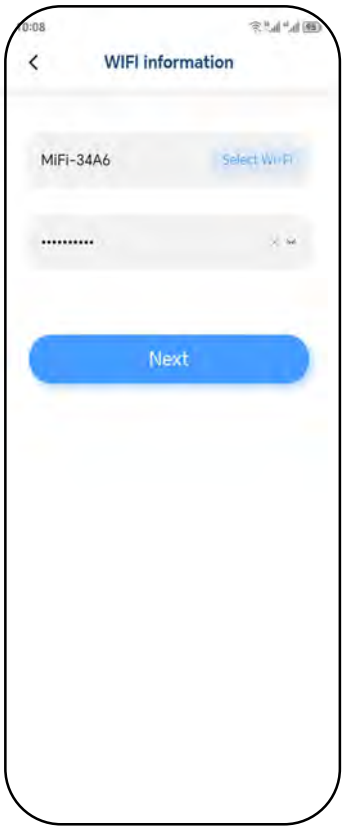

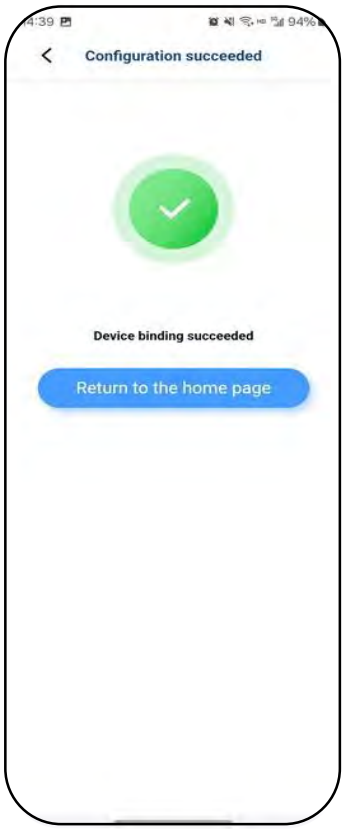

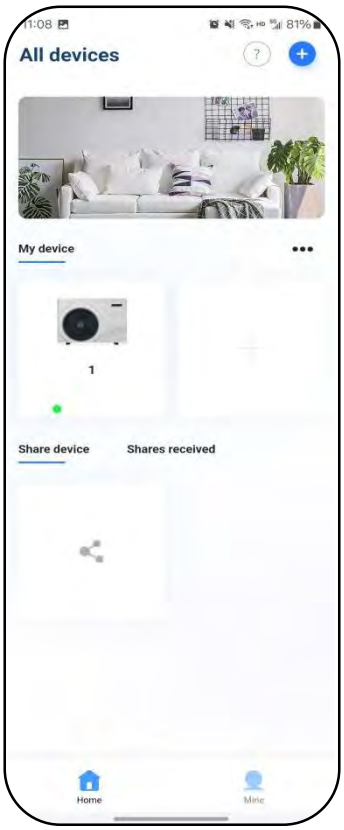

(3) When you success,you will see your heat pump in “my device” and if you want to share your device,please click the “ ” icon,and choose your heat pump,add a share and enter Eco-Home account,just click the confirm sharing.

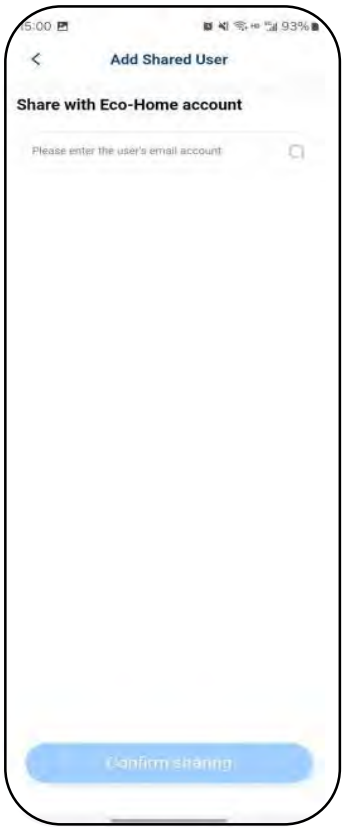

5.3 Software function operation

- After the device is bound successfully, enter the operation interface of “Eco-Home” (Device name, modifiable)
- In the main interface, click the unit to enter the operation interface.

(1) Heating & Cooling&Auto

① ON/OFF
② Mode setting
③ Target temperature

(2) Other information

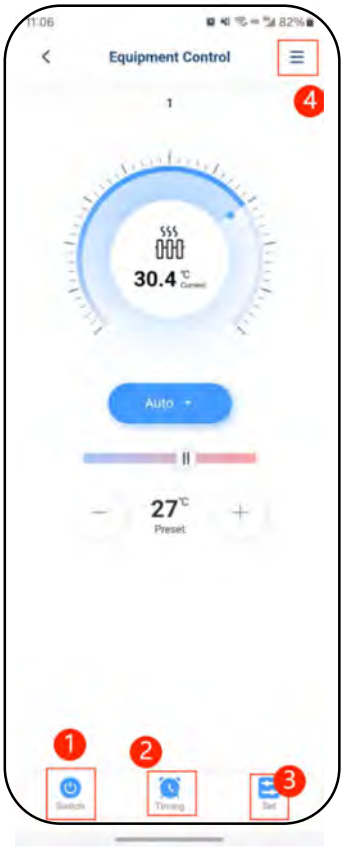

① Switch ON/OFF
② Timing
③ Setting
④ More setting

5.4 Modify Device Name/Delete Device

Click in the following order to enter device details, and click "Device Name" to rename the device. Click "Delete the Device" to remove the device.

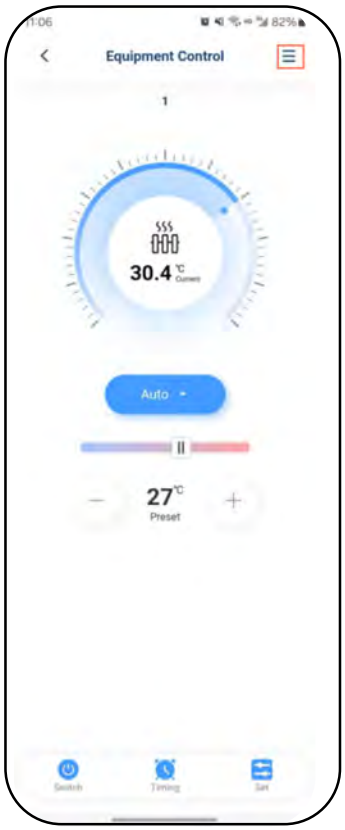

5.5 Timing

Click "Timing", then click "+", set the timer and save it

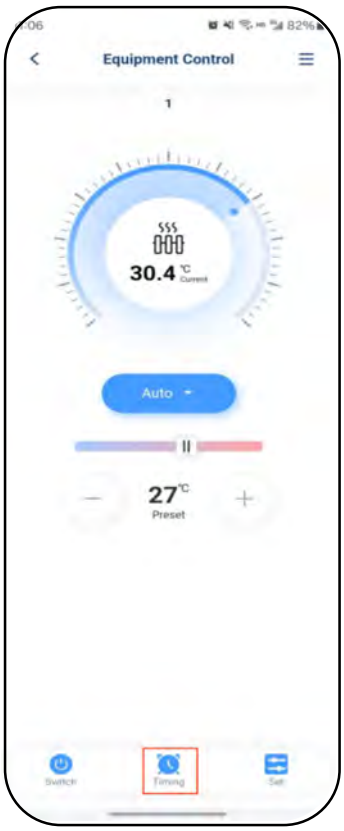

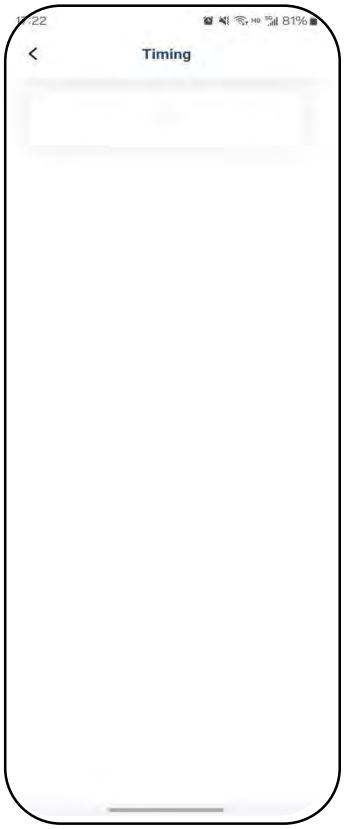

5.6 Set Parameters

(1) **Set Target Temp.**

Support to modify the content of the parameters is: Hot water target temperature, Cooling target temperature, Heating target temperature, Floor heating target temperature, and temperature units (in the modification of temperature units, the controller will re-read the main board and upload it to the APP one by one).

(2) Status Query

You can query the system status and module status.

(3) Temperature curve.

The current curve shows the temperature respectively: Exchanger water outlet Temperature, Exchanger water inlet Temperature, Ambient Temperature, DHW Temperature. Real-time curve updates.

5.7 Mine

Click "Mine" for user information, common problems, about, and logout

6.MAINTENANCE AND WINTERZING

6.1 Maintenance

⚠ **WARNING:** Before undertaking maintenance work on the unit, ensure that you have turned off the unit at the electrical power supply at the isolator and also at the main power board.

1. Cleaning

a. The heat pump's casing must be cleaned with a damp cloth. The use of detergents or other household products could damage the surface of the casing and affect its properties.

b. The evaporator at the rear of the heat pump must be carefully cleaned with a vacuum cleaner and soft brush attachment.

2. Annual maintenance

The following operations must be undertaken by a qualified person at least once a year.

a. Carry out safety checks.

b. Check the integrity of the electrical wiring.

c. Check the earthing connections.

d. Monitor the state of the pressure gauge and the presence of refrigerant.

6.2 Winterizing

"CUT OFF" power supply of the heater before cleaning, examination and repairing

In winter season when you don't swim:

a. Cut off power supply to prevent any machine damage.

b. Drain water clear of the machine if in danger of snow or freezing.

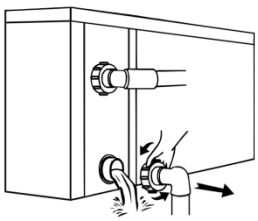

⚠ **!! Important:**

Unscrew the water nozzle of inlet pipe to let the water flow out. When the water in machine freezes in winter season, the titanium heat exchanger may be damaged.

c. Cover the machine body when not in use.

7.Warranty Information

TDI Ultra
30 Years Titanium Heat Exchanger (Pro Rata)
6 Years Compressor
2 Years Electronics
1 Year Labour

Warranty Conditions Apply - For more information visit
poolheating.com.au

Contact Information

Australian Energy Systems
Unit 17/6 Maunder St
Slacks Creek QLD
Australia 4127

Phone: 07 3299 2700
Web: poolheating.com.au

Manual P/N: